TECHTOP AUSTRALIA

TRX GEARBOX CATALOGUE

Cast iron inline helical units

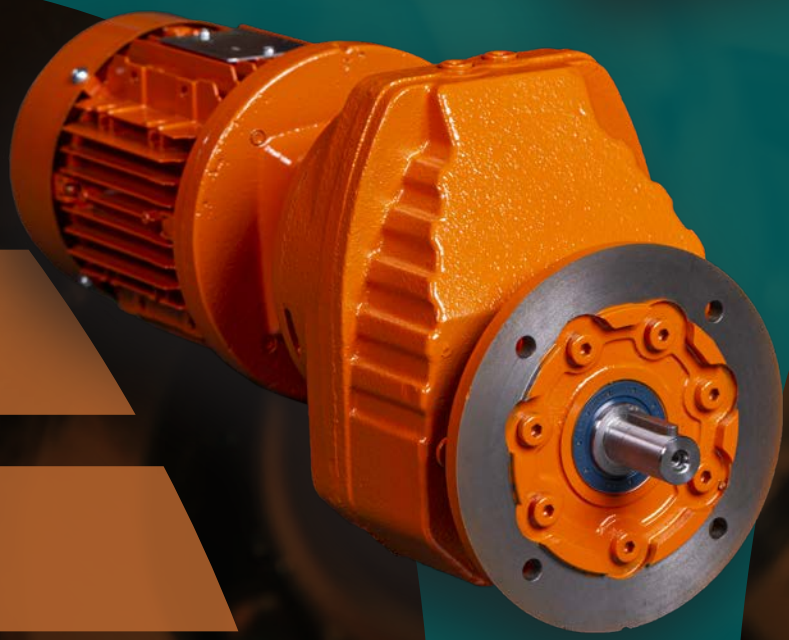

Quality. Service. Range

TECHTOP AUSTRALIA

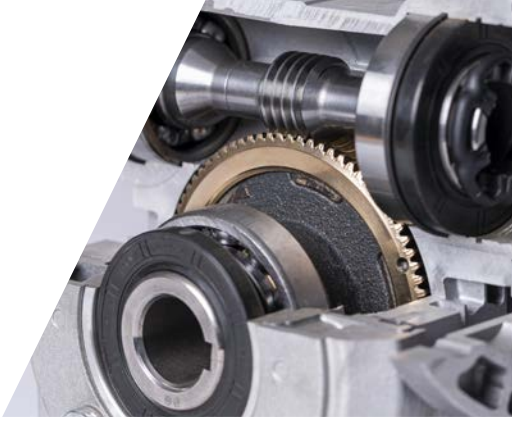

The story of Techtop Australia

A business that's powered by people.

Techtop Australia Pty Ltd, founded by well-respected Directors Rohan Pollard and Jeff Aird, entered a joint venture partnership in 2013 with Shanghai Top Motor Co, the largest manufacturer of aluminium electric motors in China.

In 2015, Jack Gringlas OAM joined the board of Techtop Australia as Chairman, the board comprising these 3 directors have knowledge of the Australian electric motor market spanning back over 40 years.

The combination of a leading motor manufacturer and Australia's most experienced sales team provides our customers with quality products, excellent service & technical knowledge.

Techtop Australia will now form part of a global organisation with Techtop's leading partners in America, Canada, Europe & U.A.E. just to mention a few.

Techtop Australia Pty Ltd, has its head office and primary distribution operation based in Dandenong, an outer eastern suburb of Melbourne.

Since our inception we have opened sales offices and warehouses in every mainland state of Australia and are now the only company that can provide direct representation in these 5 locations; Melbourne, Sydney, Brisbane, Adelaide & Perth. Each of these offices has a local manager that enjoys many years' experience in the industry and is respected by our wide and diverse customer base.

The company's strength is based on it's professional, experienced and enthusiastic staff, who are constantly striving to ensure customer service is held at the forefront of our business.

In addition to the gearbox range covered in this catalogue, we are proud to offer the widest range of related products available in the industry today, some of these are detailed below.

- Varvel Gearboxes
- Single Stage Helical Gearboxes
- Stainless Steel Gearboxes
- VVVF Drives
- ECM Variable Speed Motor
- Stainless Steel Motors
- Shaded Pole Motors

CONTENTS

	Page
INTRODUCTION	**4**
PART NUMBER LOGIC	**4**
GEARBOX SELECTION	**5**
TRX SERIES SELECTION DATA	**6 - 8**
TYPE OF COMBINATION	**9**
WEIGHTS	**9**
RATIO AND MAX TORQUE	**10**
DIMENSION DRAWINGS & DATA	
Foot Mount	**11**
Flange Mount	**12**
INSTALLATION & MAINTENANCE	**13**
LUBRICATION	**14**
LUBRICATION POINTS	
Foot Mount	**15**
Flange Mount	**16**

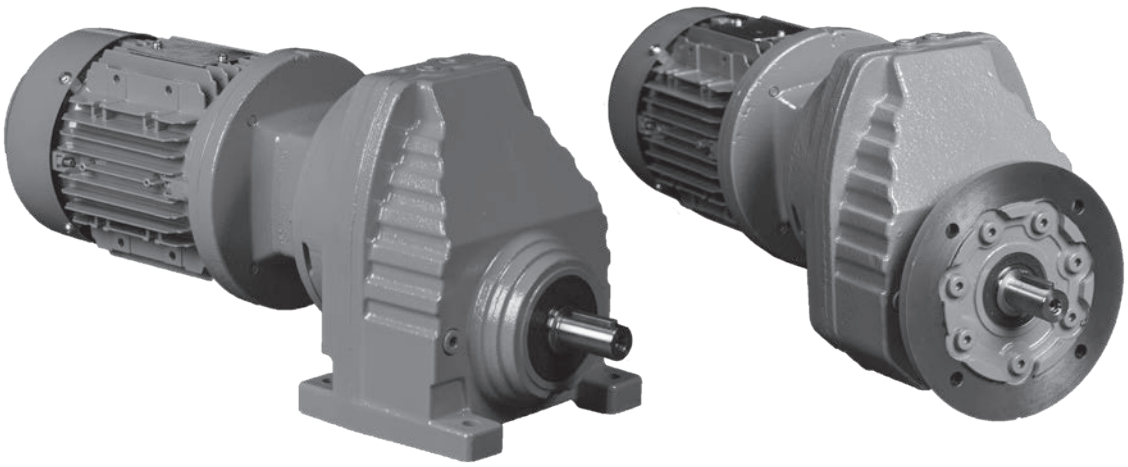

INTRODUCTION

Helical Geared Motors, Reducers, Variable Speed Drives

The comprehensive Techtop range of transmission products includes both Varvel's range of industrial gearboxes, Mechanical Friction Disc and Planetary Variable Speed Drives, along with the VarSpe Hydrostatic Variator.

In addition to this, Techtop's new helical single stage range covers 0.09kW through 45.0kW input power, with an output torque capacity of up to and including 3,360NM in foot or flange mount, available for use in many mounting positions.

Incorporated in Techtop's Transmission product is the utilization of Techtop's standard shaft and flange mounted motors to Australian standard AS/NZS 1359 and international standards, IEC 60034 & IEC 60072.

The gearboxes can also be fitted with brake, 2 speed, single phase and D.C. motors. Additional options such as clutch/brake, anti run back bearings, external cooling fans are available, contact your nearest Techtop Australia office.

The flexibility of design enables motor/gearbox units to be changed in kW rating if required provided the maximum torque capacity of the gearbox is not exceeded.

By incorporating standard metric flange mount motors in our products, this enables rapid change if required, keeping down time to a minimum.

Efficiency

All helical geared unit efficiencies are determined by gearing and bearing friction. Efficiency ranges between 94% (3 stages) and 98% (Single Stage).

In addition to the standard features of the Techtop gearbox, we can design and manufacture locally, special shafts, output flanges or input connections upon request.

Part Number Logic

Detailed below is the part number logic which should be specified when placing orders. The part number is composed in accordance with the following example:

TRX	057	0016	071	S
1-3	4-6	7-10	11-13	14

Position 1 to 3
Gearbox type = **TRX**

Position 4 to 6
Gearbox Model
057, 067, 077, 087, 097, 107

Position 7 to 10
Gearbox Ratio
Gearbox ratio x 10 with four characters used

Position 11 to 13
Gearbox input size (IEC B5)
(071, 080, 090, 100, 112, 132, 160, 180, 200 or 225)

Position 14
Mounting type
Foot mount = **S**
Flange mount:
A = 120, **B** = 140, **C** = 160, **D** = 200, **E** = 250,
F = 300, **G** = 350, **H** = 400, **I** = 450

GEARBOX SELECTION

Operating conditions decide the selection of the drive.

Before turning to the selection tables the appropriate service factor must be determined, taking into account the following points:

- Type of driven machine
- Required power (kW) or torque (Nm)
- Total operational hours per day
- Reversing
- Shock loading
- Input and output speeds
- Mounting arrangement

DAILY OPERATION IN HOURS	8 HOURS			16 HOURS			24 HOURS		
STARTS PER HOUR	10	10-200	200	10	10-200	200	10	10-200	200
Light Duty Cycle	0.9	1	1.1	1	1.1	1.2	1.0	1.2	1.4
Medium Duty Cycle	1.0	1.1	1.3	1.1	1.3	1.5	1.3	1.5	1.6
Heavy Duty Cycle	1.3	1.4	1.6	1.5	1.6	1.7	1.6	1.7	1.8

Load Classification - Driven Machine

Uniform/Light Duty Cycle
Mass acceleration factor ≤ 0.3

Generators, belt conveyors, platform conveyors, screw conveyors, auxiliary machine tool drives, agitators and mixers for light uniform density materials.

Moderate Shock/Medium Duty Cycle
Mass acceleration factor ≤ 3

Main machine tool drives, hoists, slewing gear, cranes, induced draught fans, mixer and agitators for materials with variable density, multi-cylinder piston pumps, metering pumps, elevators.

Heavy Shock/Heavy Duty Cycle
Mass acceleration factor ≤ 10

Punch presses, shears, Banbury mixers, rolling mill and foundry drives, bucket dredger, heavy centrifugal drives, heavy metering pumps, rotary drilling equipment, briquet presses, pug mills.

TRX SERIES SELECTION DATA

0.37kW

Motor 71B-4 code TA4A0375TAI
1370 r/min 1.03 Amps

Type	r/min	Nm	SF	Ratio	Gearbox code	Overhung Load
TRX 57-71B	830	4.3	16.00	1.65	TRX0570016071*	2240
	714	5.0	14.00	1.92	TRX0570019071*	2350
	672	5.3	13.00	2.04	TRX0570020071*	2400
	578	6.1	11.00	2.37	TRX0570023071*	2520
	519	6.8	10.00	2.64	TRX0570026071*	2610
	471	7.5	8.90	2.91	TRX0570029071*	2690
	436	8	8.10	3.14	TRX0570031071*	2760
	386	9	7.60	3.55	TRX0570035071*	2870
	361	10	7.10	3.79	TRX0570037071*	2930
	315	11	6.10	4.35	TRX0570043071*	3060
	270	13	2.80	5.07	TRX0570050071*	3210
	249	14	2.80	5.50	TRX0570055071*	3300

0.55kW

Motor 80A-4 code TA4A0555TAI
1410 r/min 1.6 Amps

TRX 57-80A	1085	4.8	13.00	1.30	TRX0570013080*	2070
	953	5.5	12.00	1.48	TRX0570014080*	2150
	855	6.1	11.00	1.65	TRX0570016080*	2230
	734	7.2	9.30	1.92	TRX0570019080*	2350
	691	7.6	8.70	2.04	TRX0570020080*	2390
	595	9	7.50	2.37	TRX0570023080*	2510
	534	10	6.80	2.64	TRX0570026080*	2600
	485	11	6.00	2.91	TRX0570029080*	2680
	449	12	5.40	3.14	TRX0570031080*	2740
	397	13	5.00	3.55	TRX0570035080*	2850
	372	14	4.70	3.79	TRX0570037080*	2910
	324	16	4.10	4.35	TRX0570043080*	3040
TRX 67-80A	311	17	3.80	4.53	TRX0670045080*	3800
	272	19	4.70	5.18	TRX0670051080*	3970

0.75kW

Motor 80B-4 code TA4A0755TAI
1420 r/min 1.94 Amps

TRX 57-80A	1092	6.6	9.30	1.30	TRX0570013080*	2050
	959	7.5	8.80	1.48	TRX0570014080*	2130
	861	8	8.00	1.65	TRX0570016080*	2210
	740	10	6.90	1.92	TRX0570019080*	2310
	696	10	6.50	2.04	TRX0570020080*	2360
	599	12	5.60	2.37	TRX0570023080*	2470
	538	13	5.00	2.64	TRX0570026080*	2560
	488	15	4.40	2.91	TRX0570029080*	2630
	452	16	4.00	3.14	TRX0570031080*	2700
	400	18	3.80	3.55	TRX0570035080*	2800
	375	19	3.50	3.79	TRX0570037080*	2860
	326	22	3.90	4.35	TRX0570043080*	2980
TRX 67-80A	313	23	2.80	4.53	TRX0670045080*	3750
	274	26	3.50	5.18	TRX0670051080*	3900

1.1kW

Motor 90S-4 code TA4B0115TAI
1420 r/min 2.6 Amps

TRX 57-90S	1092	10	6.40	1.30	TRX0570013090*	2010
	959	11	6.10	1.48	TRX0570014090*	2090
	861	12	5.60	1.65	TRX0570016090*	2160
	740	14	4.80	1.92	TRX0570019090*	2270
	696	15	4.50	2.04	TRX0570020090*	2310
	599	18	3.90	2.37	TRX0570023090*	2420
	538	20	3.50	2.64	TRX0570026090*	2500
	488	22	3.10	2.91	TRX0570029090*	2570
	452	23	2.80	3.14	TRX0570031090*	2630
	400	26	2.60	3.55	TRX0570035090*	2730
	375	28	2.40	3.79	TRX0570037090*	2780
TRX 67-90S	330	32	2.50	4.30	TRX0670043090*	3610
	313	34	2.40	4.53	TRX0670045090*	3660
TRX 77-90S	300	35	3.50	4.73	TRX0770047090*	5380
	265	40	2.60	5.35	TRX0770053090*	5590
	252	42	2.60	5.63	TRX0770056090*	5680

1.5kW

Motor 90L-4 code TA4B0155TAI
1440 r/min 3.4 Amps

TRX 57-90S	1108	13	4.70	1.30	TRX0570013090*	1980
	973	15	4.50	1.48	TRX0570014090*	2050
	873	16	4.10	1.65	TRX0570016090*	2120
	750	19	3.50	1.92	TRX0570019090*	2220
	706	20	3.30	2.04	TRX0570020090*	2260
	608	24	2.90	2.37	TRX0570023090*	2360
	545	26	2.60	2.64	TRX0570026090*	2440
	495	29	2.30	2.91	TRX0570029090*	2510
	459	31	2.00	3.14	TRX0570031090*	2560
	406	35	1.90	3.55	TRX0570035090*	2650
	380	38	1.80	3.79	TRX0570037090*	2700
TRX 67-90S	335	43	1.85	4.30	TRX0670043090*	3520
	318	45	1.80	4.53	TRX0670045090*	3570
TRX 77-90S	304	47	2.90	4.73	TRX0770047090*	5300
	269	53	1.90	5.35	TRX0770053090*	5490
	256	56	1.90	5.63	TRX0770056090*	5580

2.2kW

Motor 100LA-4 code TA4B0225TAI
1440 r/min 4.6 Amps

TRX 57-100LA	1108	19	3.30	1.30	TRX0570013100*	1930
	973	22	3.10	1.48	TRX0570014100*	1990
	873	24	2.80	1.65	TRX0570016100*	2060
	750	28	2.40	1.92	TRX0570019100*	2150
	706	30	2.30	2.04	TRX0570020100*	2190
	608	35	1.95	2.37	TRX0570023100*	2280
	495	42	1.75	2.91	TRX0570029100*	2340
	459	46	1.40	3.14	TRX0570031100*	2450
TRX 67-100LA	450	47	2.10	3.20	TRX0670032100*	3130
	382	55	1.55	3.77	TRX0670037100*	3280
TRX 77-100LA	356	59	2.40	4.04	TRX0770040100*	4950
	304	69	1.75	4.73	TRX0770047100*	5180

3.0kW

Motor 100LB-4 code TA4B0305TAI
1445 r/min 6.3 Amps

Type	r/min	Nm	SF	Ratio	Gearbox code	Overhung Load
TRX 57-100LB	1112	26	2.40	1.30	TRX0570013100*	1870
	976	29	2.30	1.48	TRX0570014100*	1930
	876	33	2.00	1.65	TRX0570016100*	1990
	753	38	1.75	1.92	TRX0570019100*	2070
	708	40	1.65	2.04	TRX0570020100*	2100
	610	47	1.40	2.37	TRX0570023100*	2180
	497	58	1.30	2.91	TRX0570029100*	2240
	460	62	1.00	3.14	TRX0570031100*	2330
TRX 67-100LB	452	63	1.55	3.20	TRX0670032100*	3030
	383	75	1.15	3.77	TRX0670037100*	3150
TRX 77-100LB	358	80	1.75	4.04	TRX0770040100*	4830
	305	94	1.25	4.73	TRX0770047100*	5050

4.0kW

Motor 112M-4 code TA4B0405TAI
1440 r/min 8.2 Amps

TRX 57-112M	1108	34	1.80	1.30	TRX0570013112*	1790
	973	39	1.70	1.48	TRX0570014112*	1840
	873	44	1.55	1.65	TRX0570016112*	1900
	750	51	1.35	1.92	TRX0570019112*	1940
	706	54	1.25	2.04	TRX0570020112*	1910
	608	63	1.10	2.37	TRX0570023112*	1780
	495	77	0.95	2.91	TRX0570029112*	1670
TRX 67-112M	706	54	2.40	2.04	TRX0670020112*	2580
	600	64	1.90	2.40	TRX0670024112*	2690
	567	67	1.75	2.54	TRX0670025112*	2730
	498	77	1.35	2.89	TRX0670028112*	2810
	450	85	1.15	3.20	TRX0670032112*	2870
TRX 77-112M	443	86	2.10	3.25	TRX0770032112*	4410
	389	98	1.55	3.70	TRX0770037112*	4560
	356	107	1.30	4.04	TRX0770040112*	4670

5.5kW

Motor 132S-4 code TA4B0555TAI
1460 r/min 11.0 Amps

TRX 67-132S	1043	50	2.00	1.40	TRX0670014132*	2220
	907	58	1.95	1.61	TRX0670016132*	2300
	785	67	1.85	1.86	TRX0670018132*	2380
	716	73	1.80	2.04	TRX0670020132*	2430
	608	86	1.40	2.40	TRX0670024132*	2520
	575	91	1.25	2.54	TRX0670025132*	2550
TRX 77-132S	685	77	2.60	2.13	TRX0770021132*	3780
	601	87	2.40	2.43	TRX0770024132*	3920
	541	97	2.20	2.70	TRX0770027132*	4030
	474	111	1.70	3.08	TRX0770030132*	4160
	449	117	1.50	3.25	TRX0770032132*	4220
TRX 87-132S	472	111	3.60	3.09	TRX0870030132*	5460
	420	125	3.20	3.48	TRX0870034132*	5640
	386	136	2.20	3.78	TRX0870037132*	5770
	324	162	1.75	4.50	TRX0870045132*	6040
TRX 97-132S	401	131	4.40	3.64	TRX0970036132*	7350
	361	145	4.00	4.04	TRX0970040132*	7580
	323	163	3.60	4.52	TRX0970045132*	7820
	297	177	2.20	4.91	TRX0970049132*	8010
	252	208	1.95	5.79	TRX0970057132*	8380

7.5kW

Motor 132M-4 code TA4B0755TAI
1450 r/min 14.3 Amps

TRX 67-132M	1036	69	1.50	1.40	TRX0670014132*	2080
	901	80	1.40	1.61	TRX0670016132*	2060
	780	92	1.35	1.86	TRX0670018132*	1930
	711	101	1.30	2.04	TRX0670020132*	1810
	604	119	1.00	2.40	TRX0670024132*	1610
TRX 77-132M	771	93	2.00	1.88	TRX0770018132*	3510
	681	105	1.85	2.13	TRX0770021132*	3620
	597	120	1.75	2.43	TRX0770024132*	3730
	537	133	1.60	2.70	TRX0770027132*	3820
	471	152	1.25	3.08	TRX0770030132*	3890
	446	161	1.10	3.25	TRX0770032132*	3820
TRX 87-132M	469	153	2.60	3.09	TRX0870030132*	5260
	417	172	2.30	3.48	TRX0870034132*	5420
	384	187	1.60	3.78	TRX0870037132*	5530
	322	222	1.30	4.50	TRX0870045132*	5760
TRX 97-132M	398	180	3.30	3.64	TRX0970036132*	7160
	359	200	2.90	4.04	TRX0970040132*	3760
	321	223	2.60	4.52	TRX0970045132*	7580
	295	243	1.60	4.91	TRX0970049132*	7750
	250	286	1.45	5.79	TRX0970057132*	8080

11.0kW

Motor 160M-4 code TA4C1105TAI
1455r/min 21.3 Amps

TRX 87-160M	1047	100	2.90	1.39	TRX0870013160*	4050
	909	116	2.70	1.60	TRX0870016160*	4200
	754	139	2.50	1.93	TRX0870019160*	4400
	677	155	2.50	2.15	TRX0870021160*	4530
	587	179	2.20	2.48	TRX0870024160*	4680
	527	199	2.00	2.76	TRX0870027160*	4790
	471	223	1.80	3.09	TRX0870030160*	4910
	418	251	1.60	3.48	TRX0870034160*	5030
TRX 97-160M	650	162	3.60	2.24	TRX0970022160*	6000
	551	191	3.10	2.64	TRX0970026160*	6280
	498	211	2.80	2.92	TRX0970029160*	6440
	441	238	2.50	3.30	TRX0970033160*	6640
	400	263	2.20	3.64	TRX0970036160*	6800
	360	292	2.00	4.04	TRX0970040160*	6970
	322	326	1.80	4.52	TRX0970045160*	7150
TRX 107-160M	313	336	2.10	4.65	TRX1070046160*	8770
	280	375	1.85	5.19	TRX1070051160*	9000

TRX SERIES SELECTION DATA

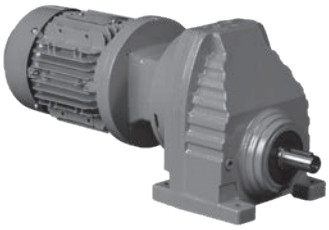

15.0kW
Motor 160L-4 code TA4C1505TAI
1460 r/min 28.2 Amps

Type	r/min	Nm	SF	Ratio	Gearbox code	Overhung Load
TRX 87-160M	1050	136	2.10	1.39	TRX0870013160*	3840
	913	157	2.00	1.60	TRX0870016160*	3960
	756	189	1.90	1.93	TRX0870019160*	4130
	679	211	1.80	2.15	TRX0870021160*	4230
	589	243	1.67	2.48	TRX0870024160*	4350
	529	271	1.50	2.76	TRX0870027160*	4430
	472	303	1.35	3.09	TRX0870030160*	4510
	420	341	1.20	3.48	TRX0870034160*	4260
TRX 97-160M	553	259	2.30	2.64	TRX0970026160*	5970
	500	287	2.10	2.92	TRX0970029160*	6110
	442	324	1.85	3.30	TRX0970033160*	6270
	401	357	1.65	3.64	TRX0970036160*	6400
	361	396	1.50	4.04	TRX0970040160*	6530
	323	443	1.35	4.52	TRX0970045160*	6660
TRX 107-160M	383	374	2.20	3.81	TRX1070038160*	7930
	348	412	2.00	4.20	TRX1070042160*	8100
	314	456	1.50	4.65	TRX1070046160*	7260
	281	509	1.35	5.19	TRX1070051160*	8440

18.5kW
Motor 180M-4 code TA4C1805TAI
1460 r/min 33.2 Amps

Type	r/min	Nm	SF	Ratio	Gearbox code	Overhung Load
TRX 87-180M	1050	168	1.75	1.39	TRX0870013180*	2670
	913	194	1.65	1.60	TRX0870016180*	3770
	756	234	1.55	1.93	TRX0870019180*	3820
	679	260	1.50	2.15	TRX0870021180*	3630
	589	300	1.35	2.48	TRX0870024180*	3340
	529	334	1.20	2.76	TRX0870027180*	3040
TRX 97-180M	1028	172	2.70	1.42	TRX0970014180*	4940
	890	198	2.60	1.64	TRX0970016180*	5120
	745	237	2.40	1.96	TRX0970019180*	5350
	652	271	2.20	2.24	TRX0970022180*	5510
	553	319	1.85	2.64	TRX0970026180*	5710
	500	353	1.70	2.92	TRX0970029180*	5830
	442	399	1.50	3.30	TRX0970033180*	5960
	401	440	1.35	3.64	TRX0970036180*	6060
TRX 107-180M	383	461	2.20	3.81	TRX1070038180*	7580
	348	508	2.00	4.20	TRX1070042180*	7710

22.0kW
Motor 180L-4 code TA4C2205TAI
1460 r/min 39.4 Amps

Type	r/min	Nm	SF	Ratio	Gearbox code	Overhung Load
TRX 87-180L	1050	200	1.75	1.39	TRX0870013180*	3030
	913	230	1.65	1.60	TRX0870016180*	2750
	756	278	1.55	1.93	TRX0870019180*	2450
	679	309	1.25	2.15	TRX0870021180*	2160
	589	357	1.15	2.48	TRX0870024180*	1710
	529	397	1.00	2.76	TRX0870027180*	1270
TRX 97-180L	1028	204	2.20	1.42	TRX0970014180*	4790
	890	236	2.20	1.64	TRX0970016180*	4960
	745	282	2.00	1.96	TRX0970019180*	5160
	652	322	1.85	2.24	TRX0970022180*	5300
	553	380	1.55	2.64	TRX0970026180*	5460
	500	420	1.40	2.92	TRX0970029180*	5560
	442	475	1.25	3.30	TRX0970033180*	5650
	401	524	1.15	3.64	TRX0970036180*	5720
TRX 107-180L	432	486	1.70	3.38	TRX1070033180*	7090
	383	548	1.50	3.81	TRX1070038180*	7230
	348	604	1.40	4.20	TRX1070042180*	7330

30.0kW
Motor 200L-4 code TA4C3005TAI
1470 r/min 54.2 Amps

Type	r/min	Nm	SF	Ratio	Gearbox code	Overhung Load
TRX 97-200L	1035	203	1.65	1.42	TRX0970014200*	4450
	896	320	1.60	1.64	TRX0970016200*	4580
	750	382	1.50	1.96	TRX0970019200*	4450
	656	437	1.35	2.24	TRX0970022200*	4050
	557	515	1.15	2.64	TRX0970026200*	3560
	503	569	1.05	2.92	TRX0970029200*	3120
TRX 107-200L	1021	281	2.30	1.44	TRX1070014200*	5520
	860	333	2.10	1.71	TRX1070017200*	5720
	754	380	2.00	1.95	TRX1070019200*	5870
	639	448	1.85	2.30	TRX1070023200*	6050
	557	515	1.60	2.64	TRX1070026200*	6180
	479	598	1.40	3.07	TRX1070030200*	6310
	435	659	1.25	3.38	TRX1070033200*	6370

37.0kW
Motor 225S-4 code TC4C3705TCI
1475 r/min 65.4 Amps

Type	r/min	Nm	SF	Ratio	Gearbox code	Overhung Load
TRX 107-225S	1024	345	1.85	1.44	TRX1070014225*	5220
	863	410	1.70	1.71	TRX1070017225*	5370
	756	467	1.65	1.95	TRX1070019225*	5490
	641	551	1.50	2.30	TRX1070023225*	5610
	559	632	1.30	2.64	TRX1070026225*	5530
	480	735	1.10	3.07	TRX1070030225*	4950
	436	810	1.00	3.38	TRX1070033225*	4470

45.0kW
Motor 225M-4 code TC4C4505TCI
1475 r/min 85.1 Amps

Type	r/min	Nm	SF	Ratio	Gearbox code	Overhung Load
TRX 107-225M	1024	420	1.55	1.44	TRX1070014225*	4880
	863	498	1.40	1.71	TRX1070017225*	4540
	756	568	1.35	1.95	TRX1070019225*	4200
	641	670	1.25	2.30	TRX1070023225*	3640
	559	769	1.10	2.64	TRX1070026225*	2970
	480	894	0.90	3.07	TRX1070030225*	2080
	436	985	0.85	3.38	TRX1070033225*	1360

TYPE OF COMBINATION

The table below shows the compatibility between available ratio range and motor input adaptor.

Gear unit size	Stages	D71	D80	D90	D100	D112	D132S	D132M
TRX57	1	1.65-5.50	1.30-4.35	1.30-3.79	1.30-2.64 3.14	1.30-2.64	1.30-2.04	1.30-2.04
TRX67	1	2.04-6.07	1.61-5.18	1.40-4.53	1.40-3.77	1.40-3.20	1.40-2.54	1.40-2.54
TRX77	1	2.70-8.00	2.13-6.41	1.42-5.63	1.42-4.73	1.42-4.04	1.42-3.25	1.42-3.25
TRX87	1		3.09-8.65	2.15-7.63	1.60-6.45	1.60-5.56	1.39-4.50	1.39-4.50
TRX97	1		4.04-8.23	2.92-8.23	2.24-8.23	2.24-7.16	1.42-5.79	1.42-5.79
TRX107	1				2.64-6.63	2.64-6.63	1.71-6.63	1.71-6.63

Gear unit size	Stages	D160S	D160M	D160L	D180	D200	D225
TRX77	1	1.42-2.43	1.42-2.43				
TRX87	1	1.39-3.48	1.39-3.48	1.39-3.48	1.39-2.76		
TRX97	1	1.42-4.52	1.42-4.52	1.42-4.52	1.42-3.64	1.42 -29.2	
TRX107	1	1.44-5.19	1.44-5.19	1.44-5.19	1.44-4.20	1.44 -3.38	1.44-3.38

WEIGHTS

Weights as per table are in kgs and are indicated as follow: Gearbox Only / Geared Motor.
Weights for complete units include Techtop motors as detailed in the Selection Pages and are approximate only.

Gear unit size	Stages	D71	D80	D90	D100	D112	D132S	D132M	D160S	D160M	D180L	D180M	D200	D225S	D225M
TRX57	1	15/21	19/30	19/37	20/46	20/55									
TRX67	1			22/40	23/49	23/58	34/84	34/97							
TRX77	1			32/50	33/60	33/68	45/94	45/107							
TRX87	1						63/112	63/125	76/159	76/178	79/198	79/208			
TRX97	1						92/141	92/154	108/191	108/210	109/228	109/238	126/295		
TRX107	1								141/224	141/243	144/263	144/273	159/328	169/484	169/519

Gear unit size	Stages	D71	D80	D90	D100	D112	D132S	D132M	D160S	D160M	D180L	D180M	D200	D225S	D225M
TRXF57	1	17/23	21/32	21/39	22/48	22/57									
TRXF67	1			26/44	27/53	27/62	38/88	38/101							
TRXF77	1			34/54	37/64	37/72	49/98	49/111							
TRXF87	1						68/117	68/130	81/164	81/183	81/203	81/213			
TRXF97	1						99/148	99/161	115/198	115/217	116/235	116/245	133/302		
TRXF107	1								156/239	156/258	159/278	159/288	174/343	184/499	184/533

RATIO AND MAX TORQUE

TRX57 – 107 n_e=1400 1/min

TRX57			70Nm
i	n_a [1/min]	M_{amaz} [Nm]	F_{Ra} [N]
5.50	255	39	3010
5.07	276	36	3030
4.35	322	68	2640
3.79	369	69	2480
3.55	394	69	2420
3.14	446	65	2320
2.91	481	67	2170
2.64	530	69	1810
2.37	591	69	1500
2.04	686	69	1070
1.92	729	69	890
1.65	848	69	430
1.48	946	68	112
1.30	1075	63	132

TRX67			135Nm
i	n_a [1/min]	M_{amaz} [Nm]	F_{Ra} [N]
6.07	231	43	4010
5.18	270	75	3580
4.53	309	82	3350
4.30	326	80	3300
3.77	371	87	3090
3.20	438	100	2800
2.89	484	106	2640
2.54	551	118	2000
2.40	583	123	1530
2.04	686	134	230
1.86	753	126	225
1.61	870	114	245
1.40	1000	104	205

TRX77			215Nm
i	n_a [1/min]	M_{amaz} [Nm]	F_{Ra} [N]
8.00	175	57	6330
7.47	187	53	6200
6.41	218	103	5600
5.63	249	110	5300
5.35	262	103	5240
4.73	296	123	4900
4.04	347	143	4500
3.70	378	153	4290
3.25	431	182	3200
3.08	455	193	2560
2.70	519	215	1110
2.43	576	215	510
2.13	657	200	435
1.88	745	187	335
1.67	838	173	315
1.42	986	155	315

TRX87			400Nm
i	n_a [1/min]	M_{amaz} [Nm]	F_{Ra} [N]
8.65	162	139	7890
7.63	183	149	7490
7.20	194	140	7380
6.45	217	192	6850
5.56	252	225	6320
5.07	276	250	5980
4.50	311	290	5500
3.78	370	305	5030
3.48	402	405	2730
3.09	453	405	1950
2.76	507	405	1950
2.48	565	405	470
2.15	651	385	42
1.93	725	355	185
1.60	875	315	74
1.39	1005	290	74

TRX97			600Nm
i	n_a [1/min]	M_{amaz} [Nm]	F_{Ra} [N]
8.23	170	225	9560
7.16	196	260	8950
6.56	213	300	8500
5.79	242	420	7630
4.91	285	395	7220
4.52	438	595	6180
4.04	347	595	5380
3.64	385	595	4530
3.30	424	595	3730
2.92	479	595	2810
2.64	530	595	1980
2.24	625	595	495
1.96	714	570	19
1.64	854	505	51
1.42	986	455	132

TRX107			830Nm
i	n_a [1/min]	M_{amaz} [Nm]	F_{Ra} [N]
6.63	211	460	9700
5.61	250	455	9080
5.19	270	695	7850
4.65	301	695	7450
4.20	333	830	6420
3.81	367	830	5550
3.38	414	830	4490
3.07	456	830	3600
2.64	530	830	2170
2.30	609	830	900
1.95	718	765	555
1.71	819	705	480
1.44	972	645	315

DIMENSIONAL DRAWINGS
Foot Mounted

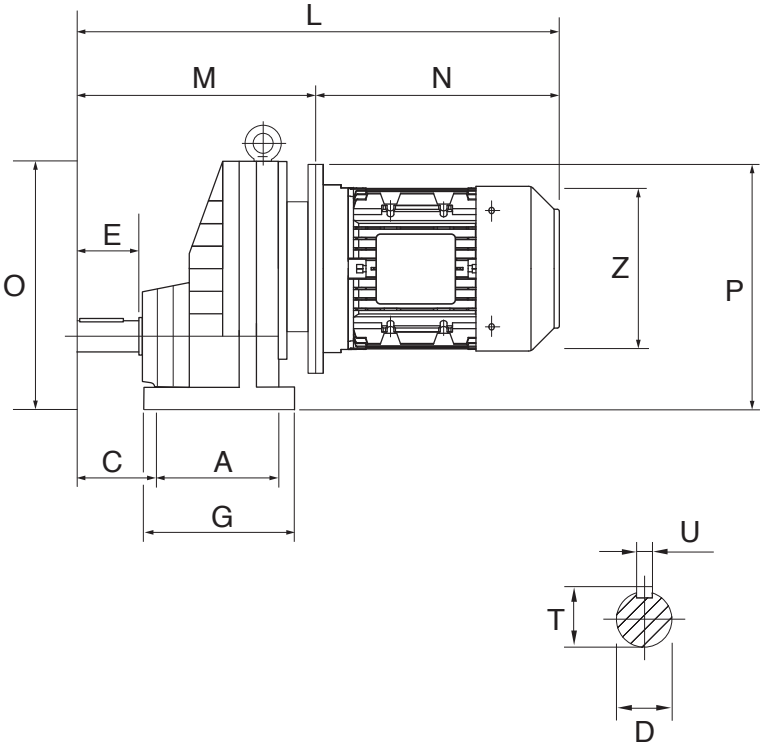

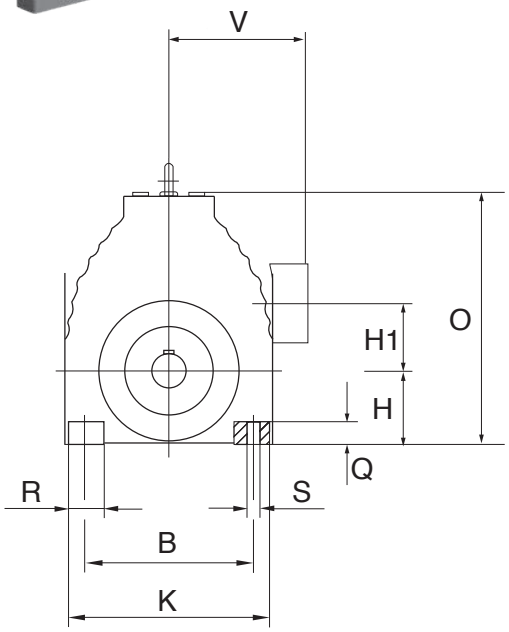

FOOT MOUNT DIMENSIONAL DATA Sizes are in mm

Size	Frame	A	B	C	D	E	G	H	H1	K	L	M	N	O	P	Q	R	S	T	U	V	Z
TRX57	D71 (1)	110	125	56	20 k6	40	137	63	52	156	476	261	215	202	195	18	31	11	22.5	6	114	138
	D80 (1)										527	287	240		215						134	158
	D90 (1)										577	287	290		215						143	177
	D100 (2)										635	318	317		240						160	200
	D112 (2)										658	318	340		240						171	220
TRX67	D90 (1)	120	135	75	25 k6	50	150	80	60	170	604	314	290	226	240	20	35	13.5	28	8	143	177
	D100 (2)										662	345	317		265						160	200
	D112 (2)										685	345	340		265						171	220
	D132 (2)										796	378	418		290						190	261
TRX77	D90 (1)	150	170	85	30 k6	60	190	90	72	204	609	319	290	271	262	25	50	17.5	33	8	143	177
	D100 (2)										680	363	317		287						160	200
	D112 (2)										703	363	340		287						171	220
	D132 (2)										841	423	418		312						190	261
TRX87	D132 (2)	160	215	110	40 k6	80	206	100	93.5	266	878	460	418	332	343.5	30	60	17.5	43	12	190	261
	D160 (2)										1057	505	552		368.5						231	313
	D180 (2)										1125	505	620		368.5						260	368
TRX97	D132 (2)	185	250	140	50 k6	100	240	112	116	320	920	502	418	393	378	35	70	22	53.5	14	190	261
	D160 (2)										1099	547	552		403						231	313
	D180 (2)										1167	547	620		403						260	368
	D200 (2)										1219	584	635		428						260	368
TRX107	D160 (2)	210	310	152	60 m6	120	260	140	130	360	1141	589	552	459	445	45	80	22	64	18	231	313
	D180 (2)										1209	589	620		445						260	368
	D200 (1)										1261	626	635		470						260	368
	D225 (2)										1331	661	670		495						332	465

DIMENSIONAL DRAWINGS
Flange Mounted

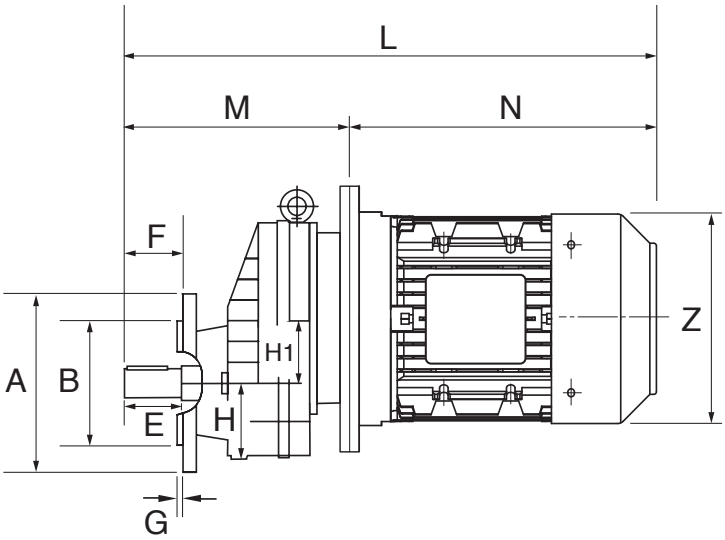

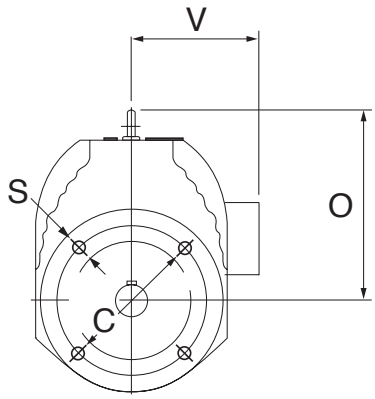

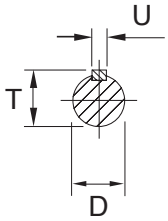

FLANGE MOUNT DIMENSIONAL DATA Sizes are in mm

Size	Frame	A	B	C	D	E	F	G	H	H1	L	M	N	O	S	T	U	V	Z
TRX57	D71 (1)	140	95	115	20 k6	40	40	3	62	52	476	261	215	139	9	22.5	6	114	138
	D80 (1)										527	287	240					134	158
	D90 (1)	160	110	130				3.5			577	287	290		9			143	177
	D100 (1)	200	130	165				3.5			635	318	317		11			160	200
	D112 (2)										658	318	340					171	220
TRX67	D90 (1)	160	110	130	25 k6	50	50	3.5	70	60	604	314	290	147	9	28	8	143	177
	D100 (2)	200	130	165				3.5			662	345	317		11			160	200
	D112 (2)	250	180	215				4			685	345	340		13.5			171	220
	D132 (2)										796	378	418					190	261
TRX77	D90 (1)	200	130	165	30 k6	60	60	3.5	78	72	609	319	290	181	11	33	8	143	177
	D100 (1)										680	363	317					160	200
	D112 (2)	250	180	215				4			703	363	340		13.5			171	220
	D132 (2)										841	423	418					190	261
TRX87	D132 (2)	250	180	215	40 k6	80	80	4	98	93.5	878	460	418	232	13.5	43	12	190	261
	D160 (2)										1057	505	552					231	313
	D180 (2)	300	230	265				4			1125	505	620		13.5			260	368
TRX97	D132 (2)	300	230	265	50 k6	100	100	4	118	116	920	502	418	281	13.5	53.5	14	190	261
	D160 (2)										1099	547	552					231	313
	D180 (2)	350	250	300				5			1167	547	620		17.5			260	368
	D200 (2)										1219	584	635					260	368
TRX107	D160 (2)	350	250	300	60 m6	120	120	5	135	130	1141	589	552	319	17.5	64	18	231	313
	D180 (2)										1209	589	620					260	368
	D200 (1)	450	350	400				5			1261	626	635		17.5			260	368
	D225 (2)										1331	661	670					332	465

INSTALLATION & MAINTENANCE

Mounting

Before mounting your Techtop geared unit ensure the mounting foundations are flat and solid.

Avoid mounting the geared unit on light fabricated steel frames or brackets which could cause amplifications of operating noise.

Shaft Alignment

Check the gearbox output shaft and the driven shaft to ensure they are properly aligned. Remember, overloads on the bearings and gear housing can be a result of incorrectly aligned shafts.

Tips for connecting the driven load

Fitting of pulleys, sprockets, etc.

The diameter of pulleys, sprockets or pinions should be selected to keep the overhung load on the output shaft within the figure recommended for the particular gearbox.

The centre line of the load pull should ideally be as close as possible to the inside end of the gearbox output shaft.

If you are using a coupling be sure to align both halves. When fitting couplings, sprockets and pinions, etc. to the gearbox output shaft "do not hammer on" as the bearings and circlip locations could be damaged. If the part is too tight try heating before fitting.

Electrical Connections

Due to variances between motor types available and our flexibility of fitting alternative degrees of protection it is important to assess each individual motor when connecting.

A Motor Connection Diagram is supplied in the motor terminal box. Wiring must be capable of withstanding the full load motor current (see motor nameplate) without causing overheating or voltage drop at motor terminals.

Initial Running

Ensure that breather supplied is fitted to its correct position ref. page 15 – 16.

To gain maximum life out of the gearbox it is recommended, if circumstances permit, to run it in under gradually increasing load, reaching full load after approximately 24 hours.

Oil Change

After approximately 200 hours running with a new geared unit it is desirable to drain and refill with clean oil, after which the oil should be drained, flushed and replaced every 5,000 operating hours or every 18 months whichever occurs first. This information relates to I·S·O 320 Viscosity Mineral Oil which is supplied by Techtop as standard unless otherwise specified.

Intervals between oil replacement could vary subject to oil operating temperature. These recommendations are based on sump temperatures up to 80°C, measured at the drain plug. It is important to maintain regular inspections of the oil level, breather efficiency, topping up levels where necessary.

Attention to Oil Seals

The input and output shafts of the gearbox are fitted with contact type oil seals to prevent oil leakage along the rotating shafts. The oil seals should be replaced if the gearbox is overhauled.

Oil Filling

Remove oil filler breather and oil level plugs and pour oil into top oil filler hole until oil commences to flow from oil level hole refer page 15 –16 for details. Seal and replace plugs before operating.

NB: Technical information contained in this manual is subject to continual improvement and could change without warning.

LUBRICATION

All Techtop TRX geared units are normally delivered with oil according to mounting position specified by the purchaser. If a mounting position is not specified, geared units will be supplied filled with oil for B3 mounting.

The following lubricants are suitable for use in the Techtop TRX units rated at -10 to + 80 degree celcius:

Shell - Omala HD320

BP - Energol HTX320

Mobil - Mobilgear SHC0630

For applications with abnormal ambient temperatures we recommend alternative lubricant be utilized. Ambient operating temperature range for standard 320, grade oil supplied is approx. -10°C to + 40°C.

Techtop should be consulted where operating temperatures exceed this range.

Lubricant fill quantities

The specified fill quantities are recommended values .The precise values vary depending on the number of stages and gear ratio. When filling, it is essential to check the oil level plug since it indicates the precise oil capacity.

The following tables show referenced values for lubricant fill quantities in relation to the Mounting position M1 ~M6

Gear unit type	Fill quantity(L)					
	M1	M2	M3	M4	MS	M6
TRX57	0.6	0.8	1.3	1.3	0.9	0.9
TRX67	0.8	0.8	1.7	1.9	1.1	1.1
TRX77	1.1	1.5	2.6	2.7	1.6	1.6
TRX87	1.7	2.5	4.8	4.8	2.9	2.9
TRX97	2.1	3.4	7.4	7	4.8	4.8
TRX107	3.9	5.6	11.6	11.9	7.7	7.7

Gear unit type	Fill quantity(L)					
	M1	M2	M3	M4	MS	M6
TRXF57	0.5	0.8	1.1	1.1	0.7	0.7
TRXF67	0.7	0.8	1.5	1.7	1	1
TRXF77	0.9	1.5	2.4	2.5	1.6	1.6
TRXF87	1.6	2.5	4.9	4.7	2.9	2.9
TRXF97	2.1	3.6	7.1	7	4.8	4.8
TRXF107	3.1	5.9	11.2	10.5	7.2	7.2

LUBRICATION POINTS
Foot Mounted

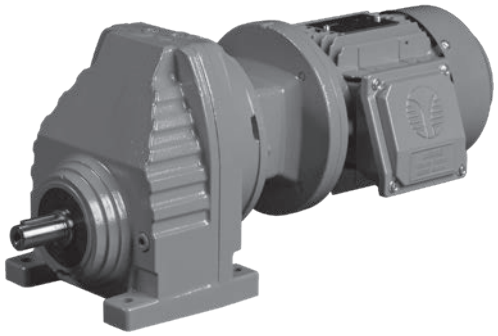

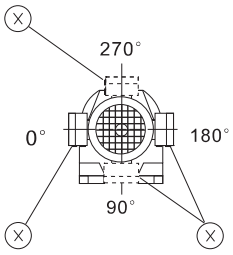

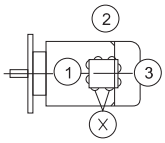

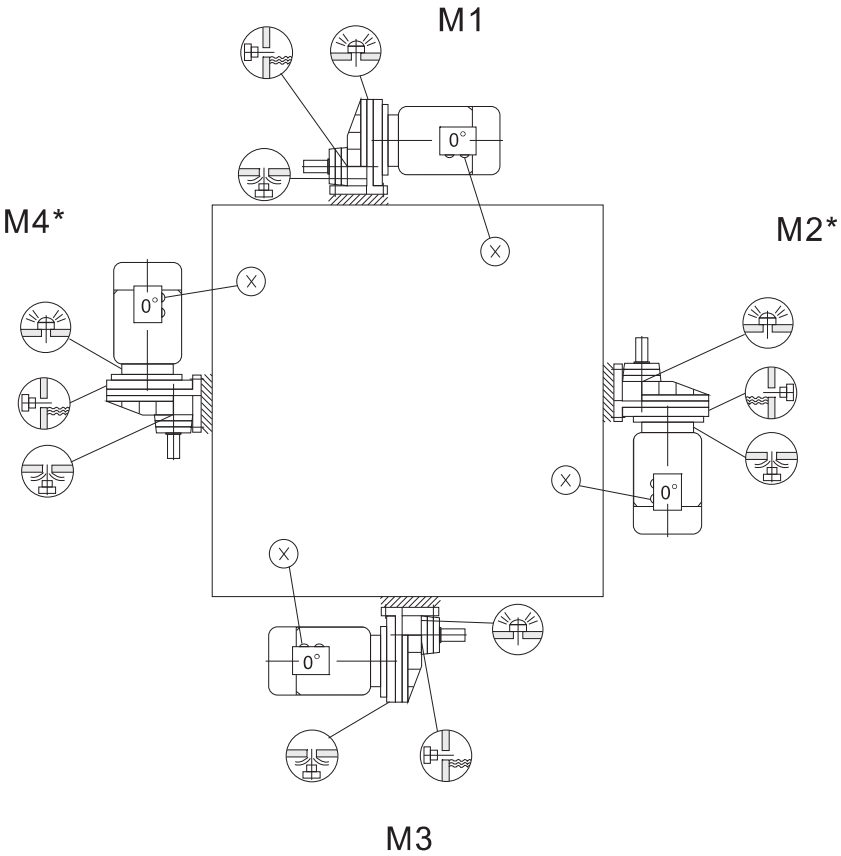

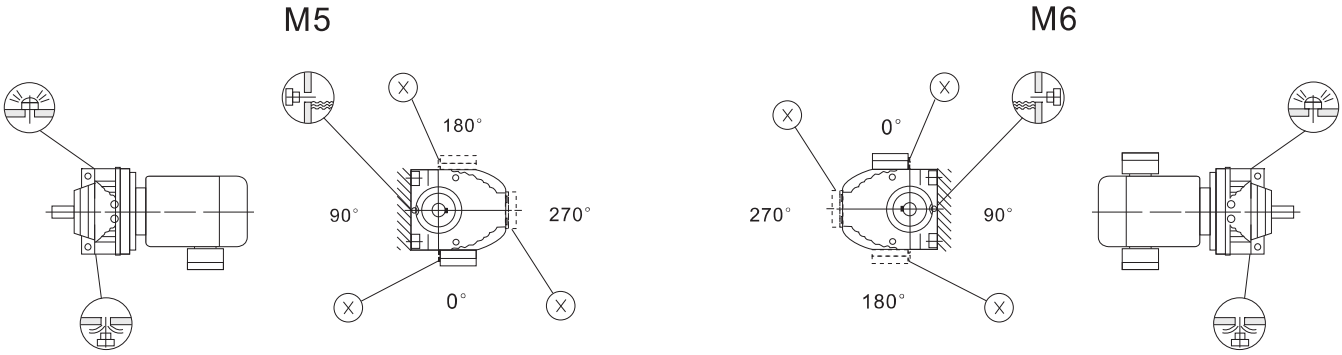

LUBRICATION POINTS
Flange Mounted

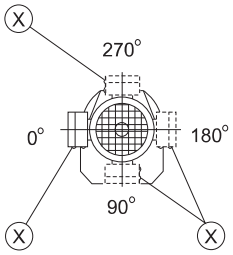

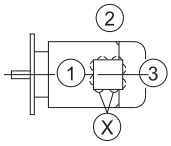

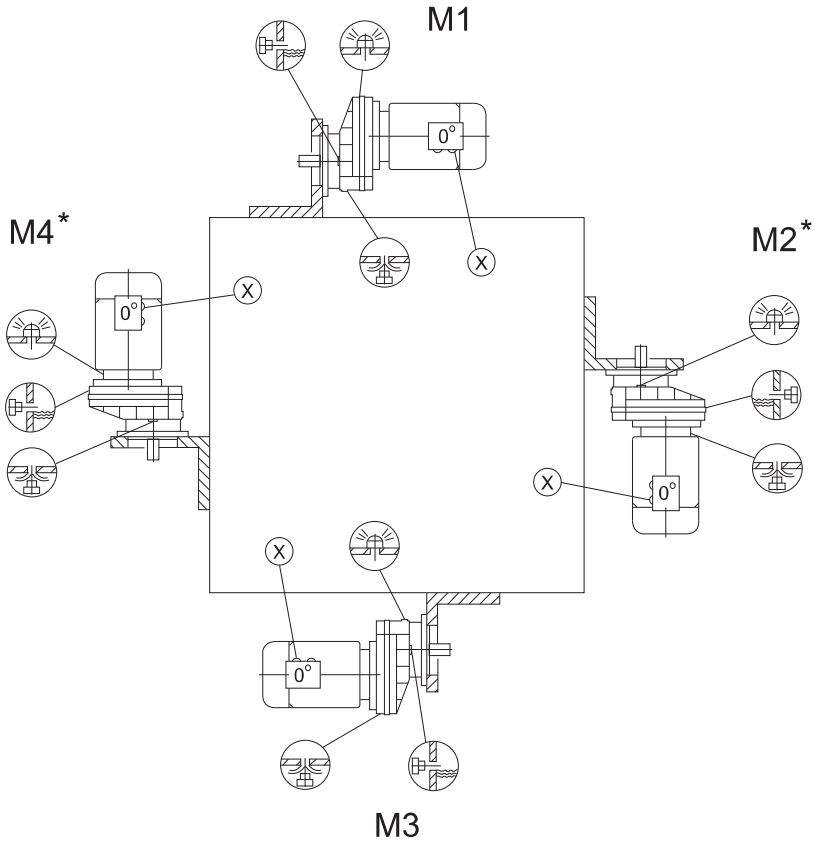

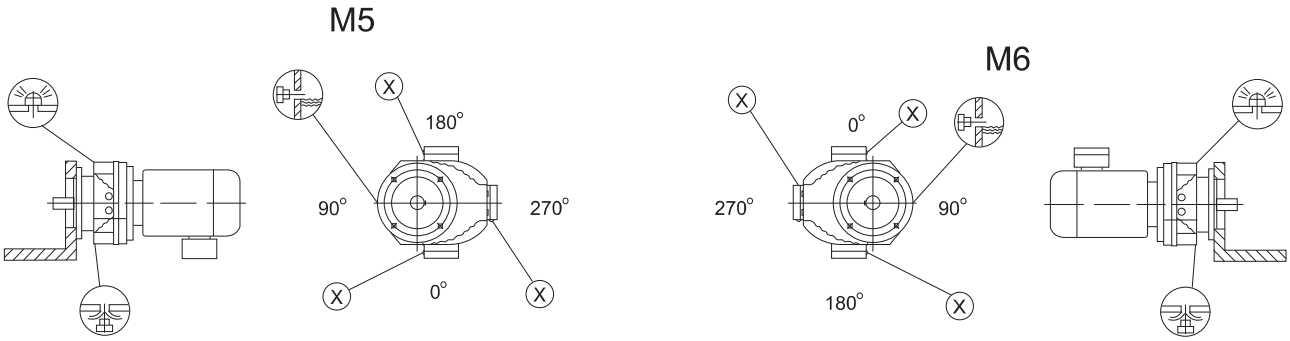

NOTES

NOTES

TECHTOP
AUSTRALIA

THE EXCLUSIVE AUSTRALIAN DISTRIBUTOR OF VARVEL GEARMOTORS

VARVEL®
KNOW-HOW TO DO IT

AN EXPANSION OF THEIR GLOBAL ALLIANCE

MADE IN ITALY

OFFICES

VICTORIA HEAD OFFICE
33-35 Gaine Road
Dandenong Sth VIC 3175
P: +61 (0) 3 9753 2222
F: +61 (0) 3 8692 6670
E: sales@techtop.com.au

QUEENSLAND
3/47 Learoyd Road
Acacia Ridge QLD 4110
P: +61 (0) 7 3106 5111
F: +61 (0) 7 3505 5394
E: qldsales@techtop.com.au

NEW SOUTH WALES
2/7 Kelham Place
Glendenning NSW 2761
P: +61 (0) 2 9114 6955
F: +61 (0) 2 8072 3389
E: nswsales@techtop.com.au

SOUTH AUSTRALIA
Unit 6/1C Oldsmobile Terrace
Dudley Park SA 5008
P: +61 (0) 8 8829 3088
E: sasales@techtop.com.au

WESTERN AUSTRALIA
1 Kalgan Road
Welshpool WA 6106
P: +61 (0) 8 9908 9111
E: wasales@techtop.com.au

AUSTRALIAN DISTRIBUTORS – MGP TAS PTY LTD

47A Elizabeth St
Devonport TAS 7310 Australia
P: +61 (0) 3 6441 5236
F: +61 (0) 3 6441 5237
E: sales@mgptas.com.au

NEW ZEALAND DISTRIBUTORS – JOHN BROOKS LTD

AUCKLAND
5 Andromeda Cres
East Tamaki, Auckland 2013
Freephone: 0800 48 49 50
P: +64 9 274 7114
F: +64 9 274 8497
E: salesakl@johnbrooks.co.nz

WELLINGTON
495 Hutt Road
Lower Hutt, Wellington 5010
Freephone: 0800 24 34 44
P: +64 4 568 6196
F: +64 4 568 6198
E: saleswn@johnbrooks.co.nz

CHRISTCHURCH
120 Wigram Road
Canterbury, Christchurch 8025
Freephone: 0800 37 38 39
P: +64 3 366 9514
F: +64 3 379 4876
E: saleschc@johnbrooks.co.nz

GEA0819V1.0C